# ACUMAX® sealed maintenance-free lead-acid battery AML series

## AML 35-12

Sealed, maintenance free, lead-acid **ACUMAX®** batteries with a **10 - 12** years designed lifetime are made in **AGM** technology - electrolyte is absorbed in highly porous fiber glass separators placed between the plates. They use a gas recombination cycle which prevents electrolyte loss and allows the batteries to be used in rooms without forced ventilation, that are occupied by people. One-way, self-regulating pressure relief valves prevent the case from blowing up, by preventing excessive buildup of pressure in the cells.

## Main applications

- uninterruptible power supplies
- telecom power supply systems
- telecommunication PABX
- power station
- fire and security systems
- solar powered systems
- emergency lighting systems
- cable TV
- marine
- golf-carts, wheelchairs
- mobile and portable equipment
- medical equipment

## Technical data

| | |
|---|---|
| Nominal voltage | 12 V |
| Nominal capacity | 35 Ah/ $C_{20}$ |
| Design life | 8 years @ 25°C<br>10-12 years @ 20°C according to Eurobat, High Performance group |
| Weight | ~ 10.3kg |
| Dimensions | |
| Height | 168 mm |
| Length | 197 mm |
| Width | 131 mm |
| Internal resistance | ~ 6.0 mΩ* |
| Charging voltage @ 25°C | |
| Standby use | 13.65 V ± 0.15 V |
| Cykle use | 14.70 V ± 0.30 V |
| Charging current | |
| Recommended | 3.5 A |
| Maximum | 10.2 A |
| Max. discharge current (5s) | 510 A |
| Container material | |
| Standard | ABS UL 94-HB |
| Optional (Flame-retardant) | ABS UL 94-V0 |

*for a fully charged battery

Battery approved for transportation by air, sea or land. Classified as non-hazardous material: *IATA/ICAO Special Provision A67, DOT-CFR Title 49 parts 171-189, IMDG amendment 27.*

## Discharge characteristics

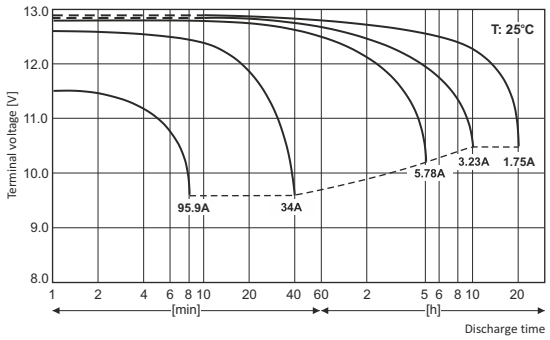


## Dimensions

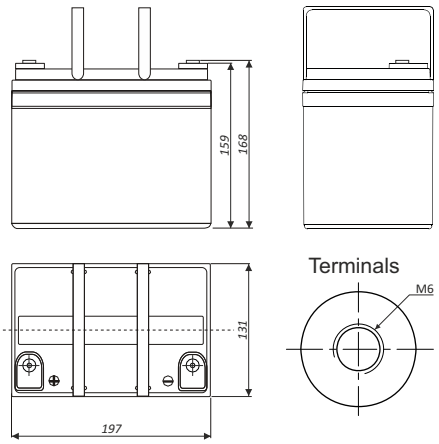


Tolerance: +/- 2mm;

## Constant current discharge (Current [A], 25 [°C] / 77 [°F])

| $U_k$ [V/cell] | Discharge time | | | | | | | | | | |
|---|---|---|---|---|---|---|---|---|---|---|---|
| | 5 min | 10 min | 15 min | 30 min | 1h | 2h | 3h | 4h | 5h | 10h | 20h |
| **1,80** | 107 | 78,7 | 61,2 | 35,6 | 19,9 | 10,1 | 8,24 | 6,15 | 5,65 | 3,08 | 1,72 |
| **1,75** | 117 | 81,2 | 64,6 | 37,5 | 20,2 | 10,9 | 8,50 | 6,24 | 5,74 | 3,23 | 1,75 |
| **1,70** | 124 | 82,5 | 66,4 | 38,2 | 20,5 | 11,4 | 8,55 | 6,31 | 5,78 | 3,25 | 1,77 |

## Constant power discharge (Power [W/cell], 25 [°C] / 77 [°F])

| $U_k$ [V/cell] | Discharge time | | | | | | | | | | |
|---|---|---|---|---|---|---|---|---|---|---|---|
| | 5 min | 10 min | 15 min | 30 min | 1h | 2h | 3h | 4h | 5h | 10h | 20h |
| **1,75** | 196 | 150 | 113 | 72,6 | 41,2 | 21,7 | 13,9 | 11,3 | 9,31 | 5,69 | 3,35 |
| **1,70** | 203 | 152 | 116 | 74,4 | 41,7 | 22,0 | 14,3 | 11,6 | 9,36 | 5,72 | 3,38 |
| **1,67** | 209 | 154 | 118 | 74,9 | 42,1 | 22,2 | 14,7 | 11,9 | 9,39 | 5,75 | 3,40 |

$U_F$ - Final voltage

All data are subject to change without notice.

Change no: 8/2022.02