ACUMAX® sealed maintenance-free lead-acid battery AML series

AML 120-12

Sealed, maintenance free, lead-acid **ACUMAX®** batteries with a **10 - 12** years designed lifetime are made in **AGM** technology - electrolyte is absorbed in highly porous fiber glass separators placed between the plates. They use a gas recombination cycle which prevents electrolyte loss and allows the batteries to be used in rooms without forced ventilation, that are occupied by people. One-way, self-regulating pressure relief valves prevent the case from blowing up, by preventing excessive buildup of pressure in the cells.

Main applications

- uninterruptible power supplies
- telecom power supply systems
- telecommunication PABX
- power station
- fire and security systems
- solar powered systems
- emergency lighting systems
- cable TV
- marine
- golf-carts, wheelchairs
- mobile and portable equipment
- medical equipment

Technical data

Nominal voltage	12 V
Nominal capacity	120 Ah/ C_{20}
Design life	8 years @ 25°C 10-12 years @ 20°C according to Eurobat, Long Life group
Weight	~ 35,5 kg
Dimensions	
Height	224 mm
Length	408 mm
Width	177 mm
Internal resistance	~ 5.5 mΩ*
Charging voltage @ 25°C	
Standby use	13,65 V ± 0.18 V
Cykle use	14,70 V ± 0.30 V
Charging current	
Recommended	12 A
Maximum	36 A
Max. discharge current (5s)	1200 A
Container material	
Standard	ABS UL 94-HB
Optional (Flame-retardant)	ABS UL 94-V0

*for a fully charged battery

Akumulator dopuszczony do transportu drogą lotniczą, morską lub lądową. Sklasyfikowany jako materiał nie niebezpieczny na podstawie: *IATA/ICAO Special Provision A67, DOT-CFR Title 49 parts 171-189, IMDG amendment 27.*

Discharge characteristics

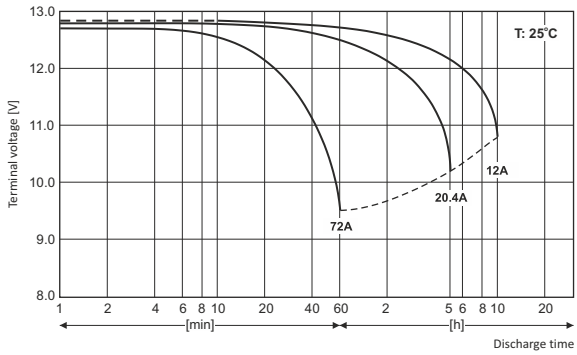

Dimensions

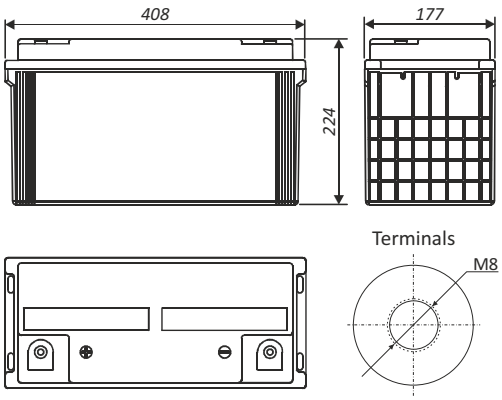

Tolerance: +/- 3mm;

Constant current discharge (Current [A], 25 [°C] / 77 [°F])

U_k [V/cell]	Discharge time									
	10 min	15 min	30 min	45 min	1h	1,5h	3h	5h	8h	10h
1,80	215	169	111	87,0	70,0	51,0	32,5	20,3	14,1	12,5
1,75	239	182	113	90,0	73,0	53,0	35,0	21,0	14,5	12,6
1,70	245	190	118	92,0	75,0	55,0	35,6	21,5	14,7	12,7

Constant power discharge (Power [W/cell], 25 [°C] / 77 [°F])

U_k [V/cell]	Discharge time									
	10 min	15 min	30 min	45 min	1h	1,5h	3h	5h	8h	10h
1,75	463	387	261	197	160	119	68,8	44,8	29,4	23,9
1,70	496	406	268	201	162	120	69,5	45,3	29,7	24,2
1,65	522	420	273	203	163	120	69,9	45,6	30,0	24,4

U_F - Final voltage

All data are subject to change without notice.